Please read this manual carefully before using.
Note: improper operation will result in safety accident.

SXJS3210

MID-RISE SCISSOR LIFT

INSTRUCTION MANUAL

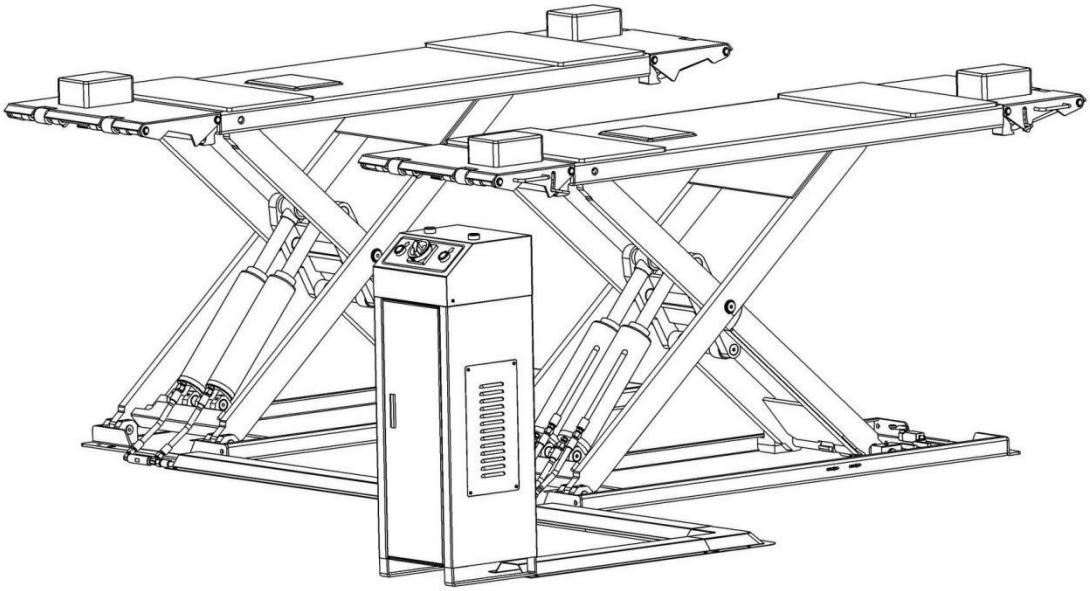

The Company reserves the right to make changes to products as a result of necessary quality improvements and design improvements without special notice.

Stanners Equipment Ltd
Add：Coopies Lane Ind. Est. Morpeth, Northumberland NE61 6JN, United Kingdom
Tel：01670 514133 E-mail: stanners@stanners-equipment.co.uk

Statement

- Copyright! No company or individual shall copy and back up this manual in any form (electronic, mechanical, photocopying, recording or other form) without the written consent of Yantai Haide Science and Technology Co., Ltd. (hereinafter referred to as "SUNSHINE").
- Before using this product, please read the manual in detail, strictly in accordance with the provisions of this manual for the operation, maintenance and maintenance of the product. In violation of the provisions of the operation, the consequences caused by this, the company does not bear any responsibility!
- This manual is designed for the use of SUNSHINE products, and we are not responsible for the consequences of using them to guide the operation of other equipment!

Manufacturer

Yantai Haide Science and Technology Co., Ltd.
Add：No.14, Wuxi Road, Economic and Developed District, Yantai, China
Tel：86-535-6853129
Fax: 86-535-6853815
www.ythaide.com

UK Importer / Distributor

Stanners Equipment Ltd.
Add：Coopies Lane Ind. Est. Morpeth, Northumberland NE61 6JN, United Kingdom
Tel：01670 514133
Email: stanners@stanners-equipment.co.uk

CONTENTS

Chapter I Overview……1
1.1 Lift Introduction……1
1.2Technical parameters ……1
1.3Structural composition……2
1.4Hydraulic system……2
1.5Power failure emergency operation……4
1.6Control panel ……5
Chapter II safety instruction……6
2.1 Safety rules……6
2.2 Warning mark……7
2.3 Safety design introduction……7
Chapter III Installation……8
3.1Installation Environment……8
3.2 Handling, Transportation and Storage……8
3.3 Handling safety matters……8
3.4 Installation site choice……8
3.5Installation……9
3.6Upper limit switch adjustment……11
3.7Exhaust Adjustment……12
3.8Load test……13
Chapter IV Operation……14
Chapter V Maintenance……15
Chapter VI Precautions……16
Chapter VII troubleshooting and solution……17
Annex:
Products quality certificate
Inspection report
Packing list
Machine breakdown diagram
Parts breakdown diagram
Electrical schematic

Chapter I: Overview

1.1 Lift Introduction

The lift adopts the scissor-type mechanical structure; utilize the hydraulic pressure to produce the lifting power. The air pressure controls the lock and loosening of the execution components. The mechanical lock could insure the security and the hydraulic balance valve adjust the lifting flat level. It processes many advantages, such as simple structure, advanced technology, easy operation, and safety. It is especially suitable for high precision wheel alignment and Auto's repair and maintenance. The feature as below:

1. Inspection and repair functions, excellent appearance.
2. Hydraulic drive, quiet working environment.
3. Ultra-thin design, ground installation, convenient and practical.
4. Extensible platform design, suitable for different length vehicles.

1.2. Technical Performance Parameters

1.2.1 **Main Technical Parameters**

Model	Lifting height	Capacity	System pressure
SXJS3210	1000mm	3200Kg	25Mpa

Lifting time	Power	Motor power	Dimension（mm）
≤45s	415/220V,50Hz	3.0KW	2070×1900×1000

1.2.2 Dimensional Schematic Diagram

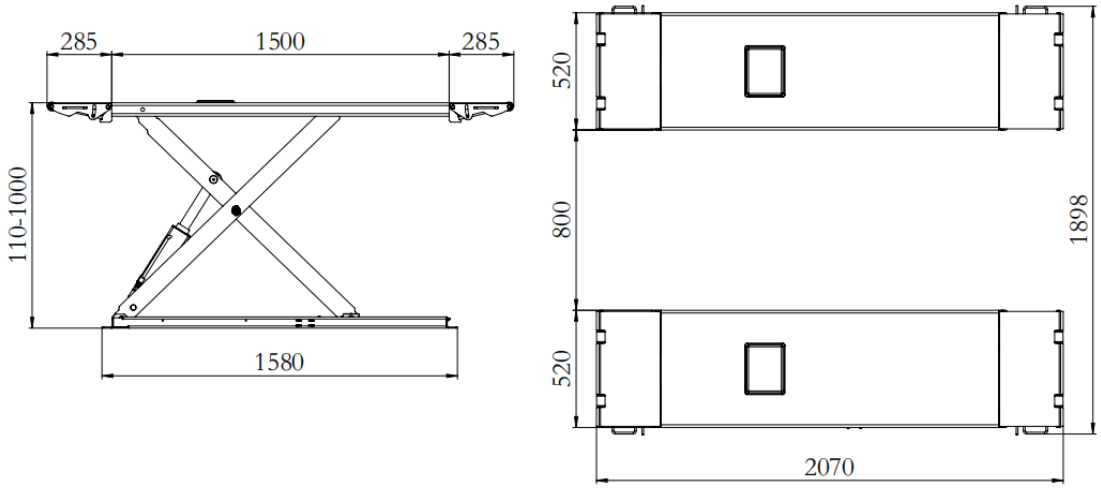

Fig 1 Dimension drawing

1.3 Structural composition

The machine is mainly composed of three parts: mechanical system, hydraulic system, and electrical system, and the main composition structure is shown in Fig.1 and 2.

1.4 Hydraulic system

The hydraulic system of the lift machine is installed in the control cabinet, the hydraulic schematic diagram is shown in figure 2, and the structural composition of the pump station is shown in figure 3.

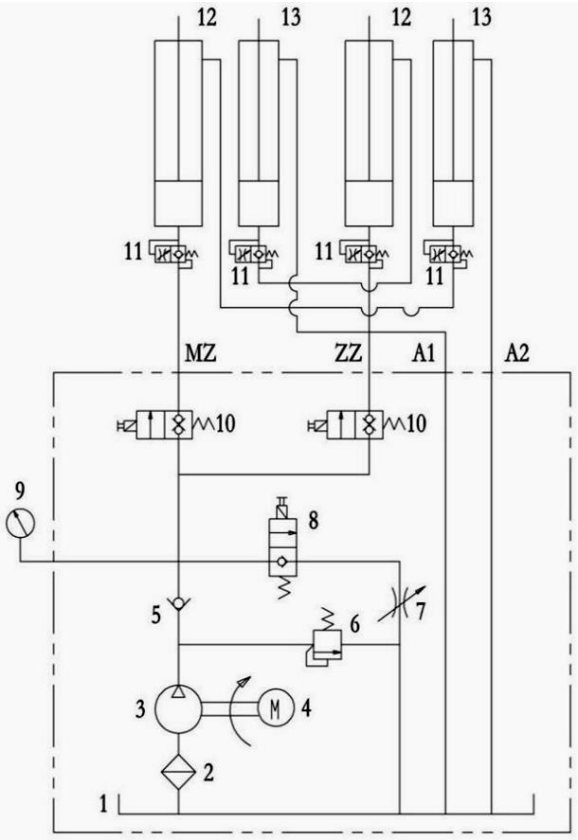

No	Code	Name	Note
1	91040960811	Oil tank	
2	91040960812	Oil filter	
3	91040960813	Oil pump	
4	91040960814	Motor	
5	91040960815	One-way valve	
6	91040960816	relief valve	
7	91040960817	throttle valve	
8	91040960818	overflow valve	
9	91040960819	Pressure gauge	optional
10	91040960820	cut-off valve	
11	21020300122	Explosion proof valve	
12	14020407017	Main cylinder	
13	14020407018	Vice cylinder	

Fig.2 Schematic diagram of hydraulic system

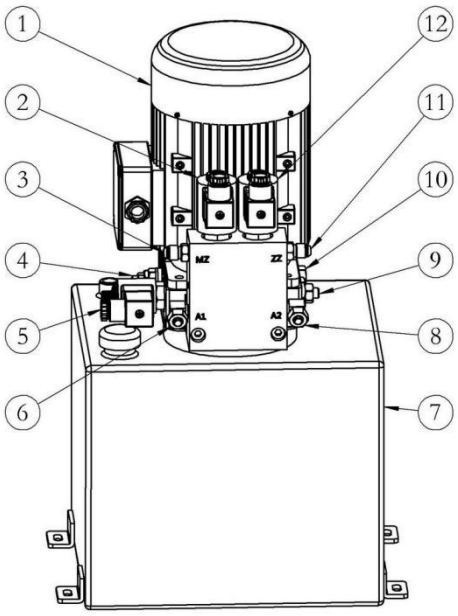

No	Code	Name	Note
1	91040960814	Motor	
2	91040960820	Electromagnetic cut-off valve	
3	15030200021	Tubing interface	MZ
4	91040960816	Relief Valve	
5	91040960818	unloading valve	
6	14010300039	PU pipe interface	A1(MA)
7	91040960811	Oil tank	Some is round
8	14010300039	PU pipe	A2(ZA)
9	91040960817	throttle valve	
10	91040960815	One-way valve	
11	15030200021	Tubing interface	ZZ
12	91040960820	Electromagnetic check valve	

Fig.3 Structure diagram of hydraulic pump station

** Note! The relief valve and throttle valve were adjusted to a suitable location before delivery, for safety reasons, prohibited casually adjusted.

No arbitrary adjustments for safety purposes .

1.4.1Relief Valve Adjustment

In Figure 3, relief valve 4 is responsible for system pressure regulation and system rated pressure is 25MPa .Remove the plastic dust shield ， the relief valve spool can be seen after the nut is unscrewed 。Rotate the spool screw clockwise and the pressure will increase ， Counterclockwise rotation reduces pressure （See fig 4 below ）。

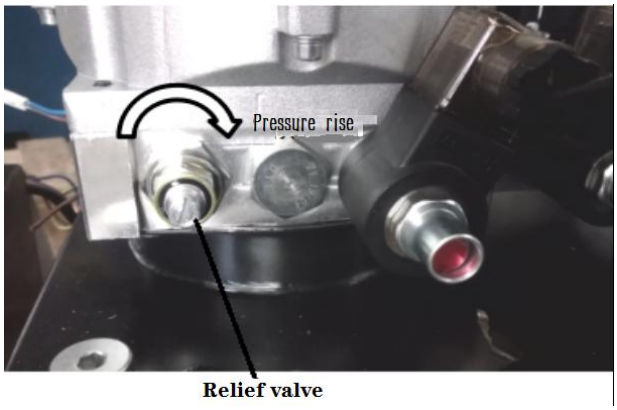

Fig 4. Relief Valve Adjustment

1.4.2 Throttle adjustment

In the photo 3, the throttle valve 9 is responsible for adjusting the descending speed of the equipment. Rotate out counterclockwise to speed up the descent; turn it in clockwise to slow down (see Fig 5)。

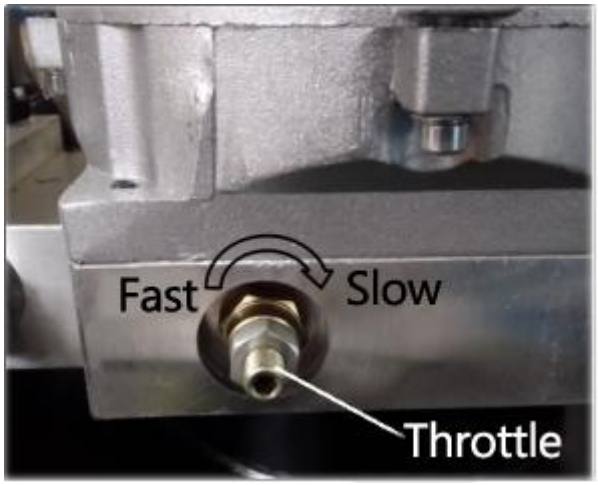

Fig 5.Throttle adjustment

1.5 Power failure emergency operation

When a power outage occurs after the device is raised, first turn off the power switch to prevent sudden calls. Then open the control cabinet and find the one-way check solenoid valve and pressure relief valve, as shown by the arrow in Figure 6. Unscrew the solenoid valve fixing nut, then press down the manual lock nut in the middle of the check valve core, and turn left counterclockwise, the lock nut will automatically return to open. In the same way, the manual lock nut of the pressure relief valve is opened, and at this time, the lifting opportunity slowly drops. After the lift has fallen to the lowest position, press the manual lock nut and rotate it clockwise to reset.

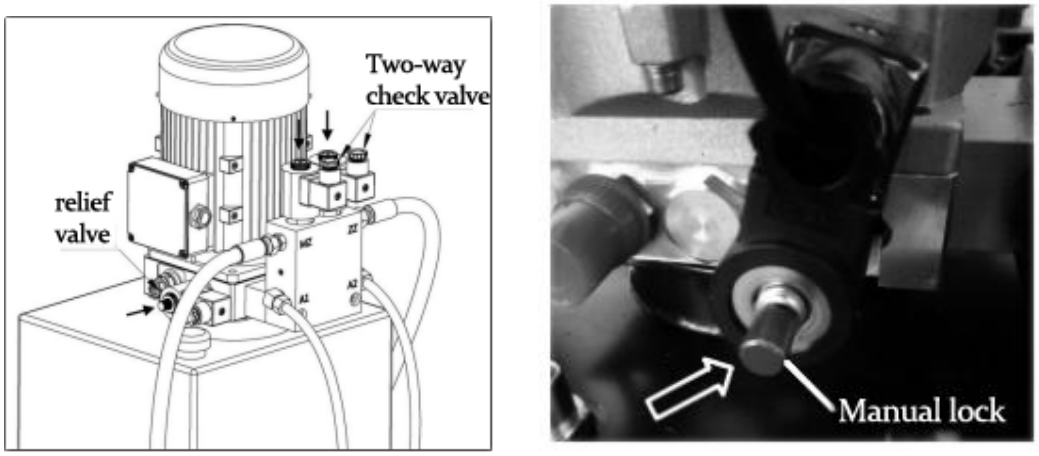

Fig 6 Power failure emergency operation

1.6 control panel

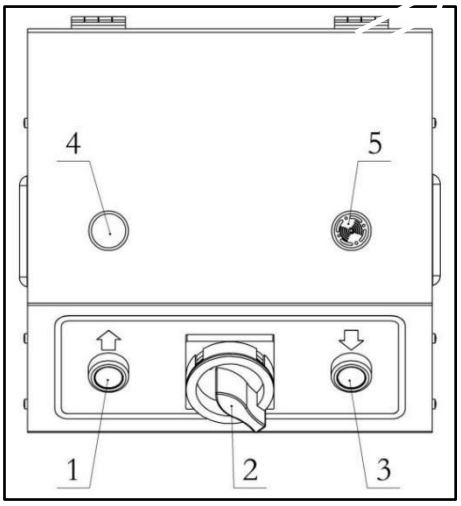

Fig7. control panel

No.	code	name	remark
1	11110100001	Up button	
2	11110100003	Power switch	
3	11110100001	Down button	
4	11300000010	Indicator light	
5	11300000011	buzzer	

Chapter 2 Safety Instructions

2.1 Safety regulations

Do not operate the equipment until you have carefully read and fully understood the instructions and rules contained in it. Negligence may cause major accidents, electric shocks or serious injury to people or property.

1. Know your machine

For your personal safety, please read this manual carefully to familiarize yourself with the applications and restrictions of the machine and the potential dangers associated with the machine. Untrained professionals are strictly prohibited from operating and using this equipment.

2. Power connection

Powered by a professional qualified electrician. Confirm that the power to be connected is consistent with the parameters on the motor nameplate. When connecting the power, you must confirm that the motor is turning correctly.

3. Keep the work area clean

Remove obstacles around and below the platform before work. Cluttered areas and load-bearing components can cause accidents.

4. Do not use in hazardous environments

Keep the work area well lit. Do not use or expose the device to wet or rainy locations. The ambient temperature is lower than 10 ° C. The compressed air needs to be filtered sufficiently effectively to prevent the pneumatic system from freezing.

5. Non-professionals should not approach

When the equipment is being lifted, no one can stand up and down, and no one can be seated in the lifted vehicle. All visitors must maintain a safe distance within the work

area.

6. Don't force to operate the machine

Let the machine work at its designed speed. The center line of the lifted vehicle must coincide with the center line of the platform of the lift, and deflection is strictly prohibited. The weight of the lifted vehicle must not exceed the lifting capacity (3200Kg) of this equipment.

7. Wear appropriate clothing

Avoid wearing loose clothing, gloves, necklaces, bracelets or jewelry that could be caught by moving parts. It is recommended to wear non-slip shoes. Wear a hood that wraps your long hair.

8. Do not maintain the machine under working conditions

The machine should be properly maintained regularly, such as lubrication and adjustment. The leveling of the equipment should be carried out under no-load condition, and the leveling operation is strictly prohibited after the load.

9. Before repairing or replacing accessories, the power of the machine must be cut off.
10. Don't let the machine run unattended. When the equipment is not working for a long time or overnight, it should be lowered to the lowest position, drive the vehicle, and cut off the power.

2.2 Warning sign (for illustration only)

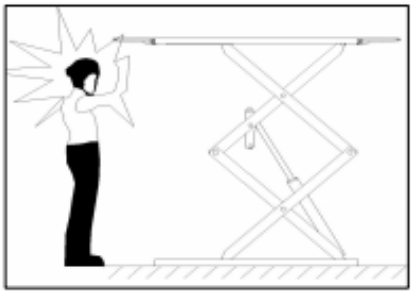

Fig. 8

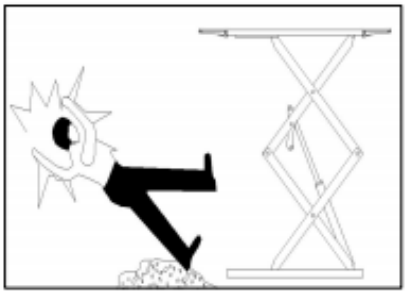

Fig 9

When the lift is in operation, personnel are not allowed to approach the lift (Fig 8).

The ground near the lift should be clean and free of oil (Fig 9).

2.3 Introduction to Security Design

2.3.1 Independent dual oil circuit design

As can be seen from Figures 2 and 12, this machine uses independent dual oil circuits, and the working solenoid valve uses a two-way check valve (Figure 3). This design can ensure the stability, safety, and reliability of the hydraulic system, and make the equipment operate simple debugging. At the same time, this independent dual oil circuit design plays the role and effect of mutual protection locks.

When the lift is in a raised state, if one of the oil circuits suddenly loses pressure for some reason, the pressure of the other oil circuit is not affected, and it can still provide sufficient support force, similar to the role of a mechanical protection lock, to keep the lift In the original lifting position and state, thus avoiding vehicle damage or even personal injury.

2.3.2 Tubing explosion-proof valve

An explosion-proof valve safety part is installed at the oil inlet of the lifting cylinder. As mentioned above, when for some special reason, the oil pipes of the two oil circuits burst or lose pressure at the same time, the oil pressure on the outside of the explosion-proof valve (inside of the oil cylinder) drops rapidly due to the rapid return of the oil. The internal valve core of the explosion-proof valve closes quickly, which can prevent the elevator from falling or slow down the speed of the elevator, and provide the necessary escape time for the operator. So as to play an effective role in security protection.

Chapter III: Installation

3.1 Installation environment

1. Air humidity: 30-90%;
2. Working Temperature: -5-40℃;
3. Power: 380V/220V, 50Hz/60Hz;
4. The maximum vertical space for installation should be bigger than 4m，the distance from obstacles like wall to lift should be bigger than 2m.

3.2 Handling、Transportation and Storage

1. Use crane or forklift to lift up the center of equipment gravity and move.

2. In case of rain or snow in process of lifting or moving, there should be proper protection measures.

3. Lift equipment should be placed in a horizontal position, and it's not allowed to pile up heavy things.

4. Storage space must be waterproof 、 moisture-proof, environment temperature within -10 ˚~+40 ˚.

3.3 Handling safety matters

1. When handling, please select the appropriate lifting equipment according to the weight of the machine to prevent damage to person or equipment.

2. When handing, please identify the location of the center of gravity to horizontally lift. It's not allowed to lift up with unbalanced position from left, right, front, rear side, in order to avoid rollover causing person or equipment damaged.

3. After lifting, under the lifting machinery and equipment people are not allowed to stand, so as to cause anyone hurt.

4. No heavy loads are allowed on the equipment.

3.4 Installation site choosing

The lifting machine should be installed in the indoor environment with no dust and other pollution and adequate lighting, the installation location should be based on the planning requirements of the whole site, as far as possible to leave enough work space. The cabinet should be placed in a safe area, can be placed on the left or right side of the lifting machine according to the situation.

Install base after tamping pouring reinforced concrete, thickness bigger than 150mm, recommendations thickness 180mm~200mm. Strength should be - 9 - above 3000PSI. The level of total length should be less than 5mm.

If the user require installing on the original foundation or the cement floor, it is still necessary to confirm whether the strength of the foundation can meet the above

requirements.

3.5 Installation

3.5.1 Precautions before installation

1. Make sure that the ground is not defective. According to Fig.10 equipment installation location picture, determine the installation location and make a line (as a reference for the installation of the equipment). The installation of ground level error should be less than 5mm

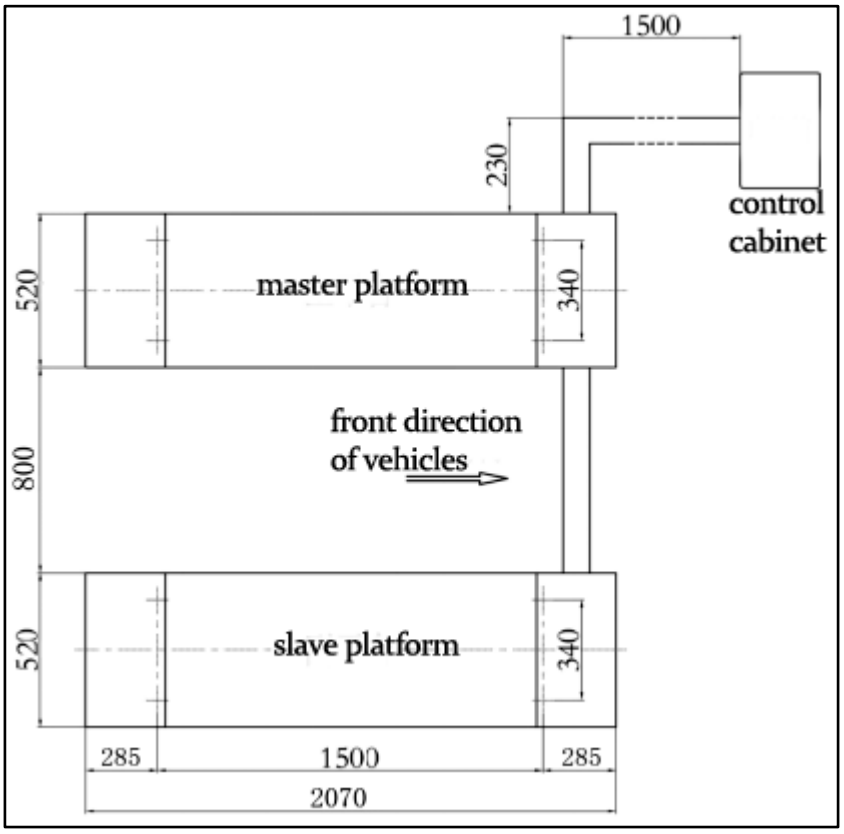

Fig 10 Equipment Installation Drawing

2. Open the box, in accordance with the "packing list", check whether there is damaged part in transit and missing pieces. 3. Installation tools required: impact drill, Φ16 impact drills, hammer, level pipe, tape measure, wrench, hex wrench, crowbar, ink line, flat screwdriver, pliers, socket and cable.

3.5.2 Place the Equipment

Put the small scissor lift into a predetermined position, in process of operating, Fig. 8 Equipment Installation Location Pictures - 10 - please pay attention to protect oil pipe and air pipe, so as to prevent the pipes damaged or entering soil, dust and other thing.

Adjust well front and rear space. With fixed installation, please firstly lift up the small scissor lift (better to drill the anchor bolts), impact drill anchor bolts holes (not install

expansion nail firstly). The horizontal error of the main and auxiliary platform was detected with the horizontal tube or the horizontal ruler, and adjusted to less than 5mm. After adjustment, the clearance of the base plate and ground must be filled with steel or cement mortar, finally beat into anchor bolt expansion screws and fastening anchor bolt (Figure 11). This step can be done after the completion of the machine testing.

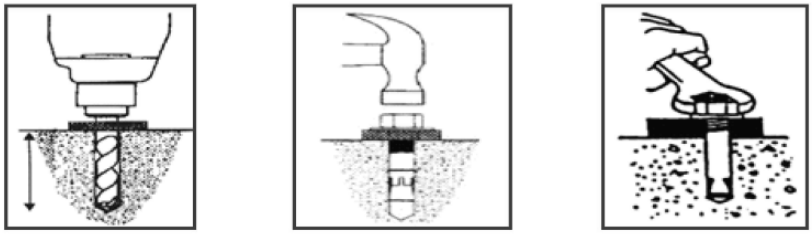

Fig11

3.5.3 Filling hydraulic oil

Add enough hydraulic oil to pump tank (about 6 liters, prepared by users). The hydraulic oil must be above 46# with high pressure and wear-resistant hydraulic oil produced by regular manufacturers.

Note: The viscosity of hydraulic oil is high for low temperature in winter, it is easy to cause declining speed of equipment unloaded particularly slow. Please change to 32 # wear-resistant hydraulic oil if necessary. Under the same temperature conditions, the same load, hydraulic oil marked lower, the smaller its viscosity, the faster the declining speed. Therefore, when the temperature is higher in summer, should replace the hydraulic oil to related one. Please refer to Chapter V, "Maintenance" for replacement of hydraulic oil.

3.5.4 Power supply

As per the requirement of the motor nameplate to connect power supply wires, the control box needs to connect the earth. **Pay attention, for the motor of 220v, the power sup415v cannot less than 2.5mm2.**

Insuring the power supply stably, never lack of the phase, keep the normal power voltage, then press the raising button uninterruptedly to check the motor rotate direction whether normal or not (the time cannot more than 3 second, as - 11 - below as same), The rotating direction is correct if there is oil out, otherwise, the motor rotate direction oppositely, please exchange any two wires which will rotate normally.

3.5.5 Hydraulic System Connection

Connect hydraulic system by Hydraulic piping connection diagram (Fig.12). Please pay attention to the pipes and their correct connectors. Do not connect wrongly. (pipe ⑦ and ⑧ are transparent for oil recycling.

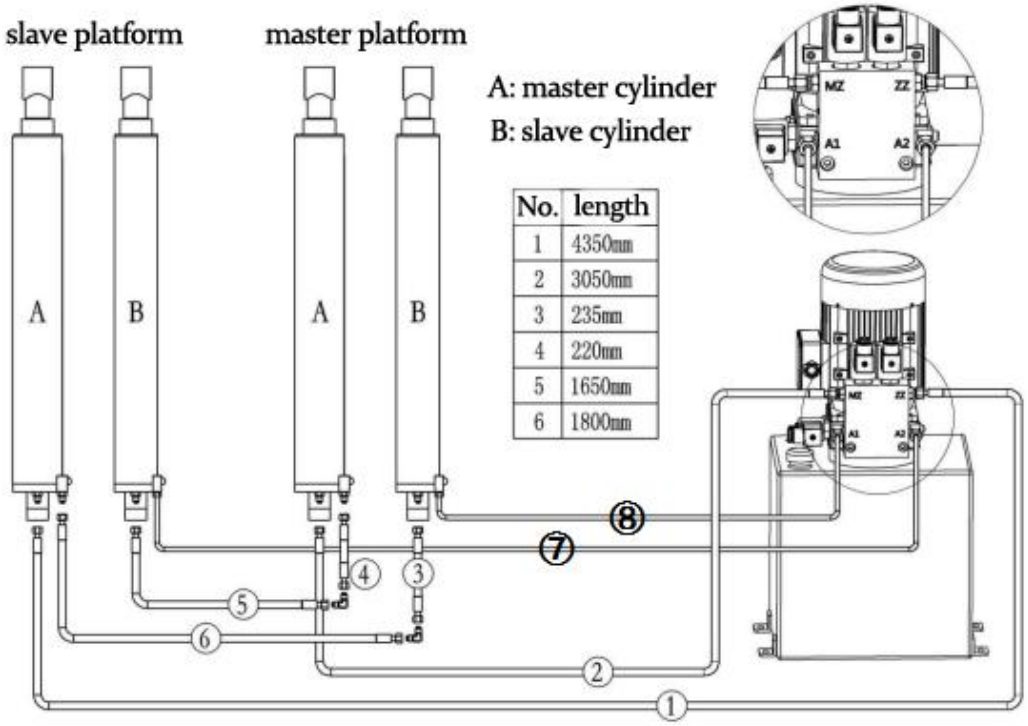

Fig 12 Hydraulic piping connection diagram

3.6 Adjustment of Max Height Limited Switch

Rise up the lift to max height. Loose screw 2. Move the limited switch forward to make rod 3 touches the sliding block 4 and make sure limited switch 1 work. Then move the limited switch forward more 5mm. Fasten screw 2 to fix the limited switch.

The scissor arms may be deformed when lifting heavy vehicles. Sliding block 4 may not be touch limited switch 1. If it is necessary, the limited switch can be moved forward and make sure it works.

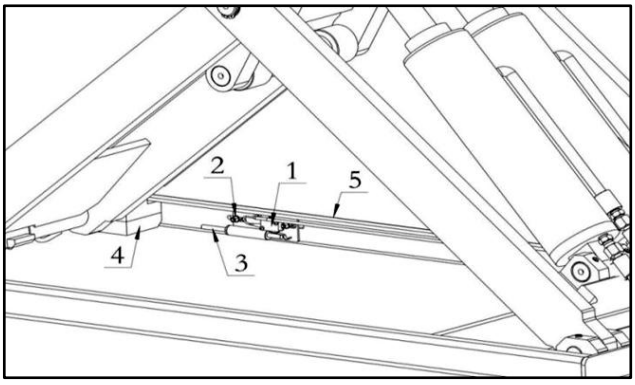

Fig 13 limited switch adjustment

No.	Code	Part Name	Remark
1	11110300006	Limited switch	
2	12020101006	Fixing screw	
3	21060300027	Switch pin	
4	21090300065	Sliding block	
5	91040930100	Lift base	

3.7 Exhaust Adjustment

Note：Before air exhausting, please make sure the max height limited switch installed and adjusted correctly.

1. Press the UP button to lift up the platforms. The platforms will be stopped lifting after the limited switch is touched by the sliding block.

2. Open the top cover of the control cabinet as Fig 14. Press the air exhausting button(The location of this button may be different due to different lift version.) to lift up the platforms continuously.

3. When the lift is raised to the highest position, do not release the button. Observe the transparent return pipe connected to the pump station (Refer to Fig. 12, please pipe ⑦and ⑧ connected to the A1(or MA) and A2 (or ZA)ports). When no more air bubbles in the two return pipes, continue to let the pump station work for about 10 seconds, then release the adjustment button and press the down button on the control panel to lower the lift to the lowest position.

4. During the normal use of the equipment, if platforms on both sides are not balancing, you need to immediately perform the exhaust leveling operation according to the above steps.

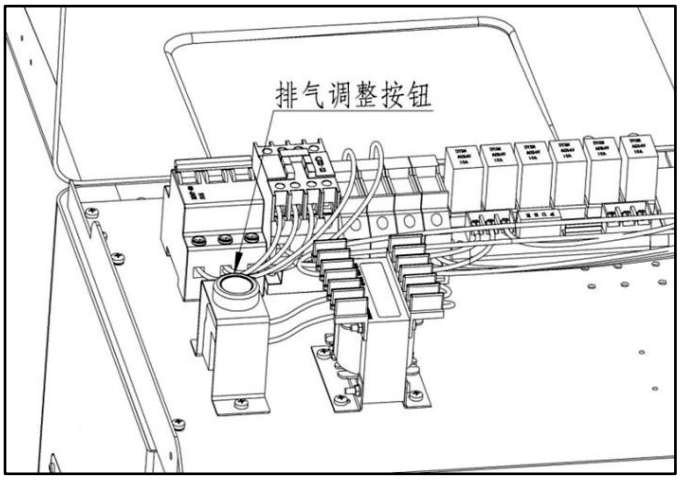

Fig.14 Adjustment button

5. It should be noted that the exhaust leveling operation must be carried out under no-load conditions, and the leveling operation is strictly prohibited during load.

3.8 Load Test

Check whether oil pipes work well, whether anchor bolts firmly fixed, whether adding lubrication oil to related points. Test to make sure everything is normal. Make sure everything is well before test.

Do unload test two or three times, you can do load test after no abnormal noise and leakage.

Do load operation two to three times. Check whether two platforms are the same height during test, whether control button is normal, whether work cycle is accurate. Whether any abnormal sound or leakage.

Lift cold be used normally after test well.

Chapter IV Operation

Safety is important during operation. Untrained professionals are strictly forbidden to operate and use this equipment. The operator will take the responsibility if any accident happened due to wrong or improper operation. Please operate according to the safety regulations strictly to ensure safety.

1. Turn on the air compressor to make it work normally and reach the required working pressure (0.5-0.8Mp).Turn on the electrical source and the indicating light is on.

2. Press the rising button, the hydraulic pump works as well. Check the height level of the two platforms. If they are not on the same level, Please perform the exhaust leveling operation according to the section "3.7 Exhaust leveling".

3. Press the descending button, and place the platform to the lowest location.

4. Drive a vehicle on the lifts. Put rubber pads under the vehicle. Make sure the lift points are directly to the rubber pads. Press up button short time. If everything is correct, press up button. Loose up button when the lift up to the position suitable for repairing or testing. Then start to repair or test.

5. Check and make sure no obstruction under or around the lift after finished testing or repairing. Then press the down button to make the working platform to the lowest position and drive away the vehicle. Please pay attention if two platforms are descent at the same time during operation.

6. Turn off the power supply and the air compressor.

7. Turn off the general brake of the electrical source. And the whole operation is over.

Chapter V Maintenance

The small scissor lift is equipment which integrated by electricity, liquid, gas so maintenance becomes more important.

1. Keep the facility clean and tidy. Nothing is permitted to put on the flat and the below of the facility to avoid damage to the equipments and hurt to people caused by the decline and extrusion during lifting and falling.
2. Maintain the control panel dry and clean. Avoid the dust to fall into the electromagnetic valve and the hydraulic oil box, and damage the hydraulic oil box and electric components.
3. Nothing is permitted to place on the operation panel in case misacting and damage of the press button and indicator light.
4. Keep the hydraulic pressure, pipeline and connection clean in case the pipelines aging and dilapidate.
5. Change the hydraulic oil every 3 months at the beginning, then every 6-19 months according to use frequency. Release the used oil thoroughly. Check the oil level regularly and infuse the oil timely when the level is over low. Foreign matter is strictly not allowed to fall into the hydraulic oil box in case it is damaged.
6. Clean the oil filter every season. Use the kerosene to clean and the brush to clean the dirty things. Pay attention to not damage the oil filter and change it once find damage.
7. Check and clean the pneumatic two-component filter timely.
8. Check whether the set screws at the hinge shaft are loose and the hinge shafts come out every half month.
9. Make lubrication once every half month.
10. Keep clean for the rolling and slider, and put in lubrication.
11. Slider should be replaced once every year. If equipment be used frequently, please replace them timely.
12. Keep clean of lift and surroundings before work.

Chapter VI Safety cautions

1. If local voltage fluctuations exceed 10%, a voltage regulator should be installed。

2. Do not damage the hydraulic and pneumatic pipe lines to avoid accidents caused by pressure loss。

3. After installing or repairing the power supply for the first time, be sure to confirm the rotation of the motor (refer to the section "3.5.4 Power Connection". It is strictly forbidden to reverse the motor to avoid damage to the pump station.

4. The hydraulic oil must be 46 # or more high-pressure anti-wear hydraulic oil produced by a regular manufacturer (see section "3.5.3 Filling hydraulic oil").

5. The locked operation must be performed before repairing or testing, so that the protection lock can be implemented.

6. The time relay in the control cabinet should be set within the range of 1.5 to 2 seconds. It is strictly prohibited to change the time setting at random (some models do not have this configuration)

7. After the device is lifted and power failure. Firstly turn off the power switch to prevent sudden power on. Then use the manual lock nut to slowly lower the lifting platform. Be sure to tighten the screws and screw on the cap nuts.

8. In Fig.3, the relief valve 2 is responsible for the system pressure adjustment. The screw in the nut is screwed in, the pressure is increased, and the screw out is reduced. Throttle valve 3 is responsible for adjusting the lowering speed, the screw in the nut is screwed in, the lowing speed is slow, and the screw out is fast. Note! when the equipment ex-factory, the valves have been adjusted to an appropriate position. For safety reasons, it is prohibited to adjust it freely.

Chapter VII Common Faults and Solutions

Breakdowns	**Reasons**	**Solutions**
1. The engine works, but no pressure.	1. No oil in the pump. 2. The filter net is jammed. 3. There is air in the pipelines or connections. The overflow valve leaks.	1. Infuse enough hydraulic oil. 2. Clean out the dirty things. 3. Exhaust, fasten the leaking connection or change the overflow valve washer.
2. No power	The engine is reversed or lack of phases.	Check three phase four line powers.
3. Correct descending procedure, but no response.	1. The control valve is jammed. 2.Unloading solenoid valve is blocked or damaged;	1.Disconnect the control valve and clean it. 2.Cleaning or replace damaged parts
4.Mechanical lock does not open;	1.Delay is incorrect; 2.Damaged cylinder; 3.Broken pneumatic solenoid valve;	1. The delay relay is set time too long or too short, and adjustment delay is 1.5 seconds.; 2.Check if the cylinder works normally; 3.Check if the pneumatic solenoid valve is working properly;
5.No lifting.	1. Something wrong with the button. 2. The electromagnetic valve doesn't work.	1. Check or change the button. 2. Check the electromagnetic valve and the relative lines
6. There is pressure in the hydraulic system, but it is under 18Mp. It cannot lift a car.	1. Seals of the Non-return Valve or Overflow Valve are invalid. 2. Lack of hydraulic oil.	1. Check the seal circle of the Non-return Valve or Overflow Valve, and the inner tie-in of hydraulic box. 2. Infuse hydraulic oil.
7. Shaking and hard to adjust the height.	There is air in the hydraulic loop.	Raise the cylinder to the highest and the assistant to the lowest, dismantle the pipe connections to exhaust.
8. Heavy car cannot be lifted.	Lack of pressure.	The Common pressure is 18Mp. Adjust the system pressure to 25Mp for the heavy cars, and restores it after getting down.
9. The Button doesn't work.;	There is open circuit.	Check that if the circuit ends becomes loosen.
10.The insurance doesn't work.	There is short circuit.	Check that if there is short-circuit in circuit.

Ultra-thin middle rise scissor lift SXJS3210

Certificate of compliance

This product implementation Q/0601KHD002-2013 standards, passed the test, allowed leaving the factory.

size：2070mm×1900mm×110mm

Serial number：

Legal Representative： **Inspector：**

year **month** **day**

YANTAI HAIDE SCIENCE AND TECHNOLOGY CO., LTD
ADD: NO.21 TONGRUN ROAD APEC INDUSTRIAL ZONE, ZHIFU DISTRICT, YANTAI .
FAX :0535-6853815 POST CODE：264002
SALES LINE：0535-6853812， 6853816 SERVICE LINE ： 0535-6853811，6853813

Inspection Report

Product Name：Mid-rise scissor lift

Model：SXJS3210

The Q/KHD002-2004 Criterion is executed on this product. Before the product being put into the market, the inspection items and results are as follows:

Series No.	Inspection Items	unit	Inspection Items	Measured Value
1	Lifting Height	mm	1000	
2	Lifting Weight	Kg	3200	
3	System Pressure	Mp	≤25	
5	Lift time	s	≤50	
6	No-load synchronization accuracy	mm	8	
7	Repeatability	mm	8	
8	Synchronization precision bearing	mm	8	

Quality Inspector：

Date：

Packing list

No	Name	Specification	Quantity	Remark
1	Main lift	SXJS3210	2	
2	Motor		1	
3	Thick rubber pad	163*120*65	4	
4	Thin rubber pad	168*125*25	4	optional
5	Water separator		1	
6	Compound pad	Φ14	10	
7	Expansion bolt	M16x120	8	
8	Pad		16	
9	Plastic band		20	
10	Expansion bolt	M6x50	18	
11	Oil pipe cover		5	
12	Inspection report		1	
13	Manual		1	
14	Packing list		1	

Packing：　　Inspector：

Packing date　：　　Inspection date：

Figure 1. The exploded view of the whole machine

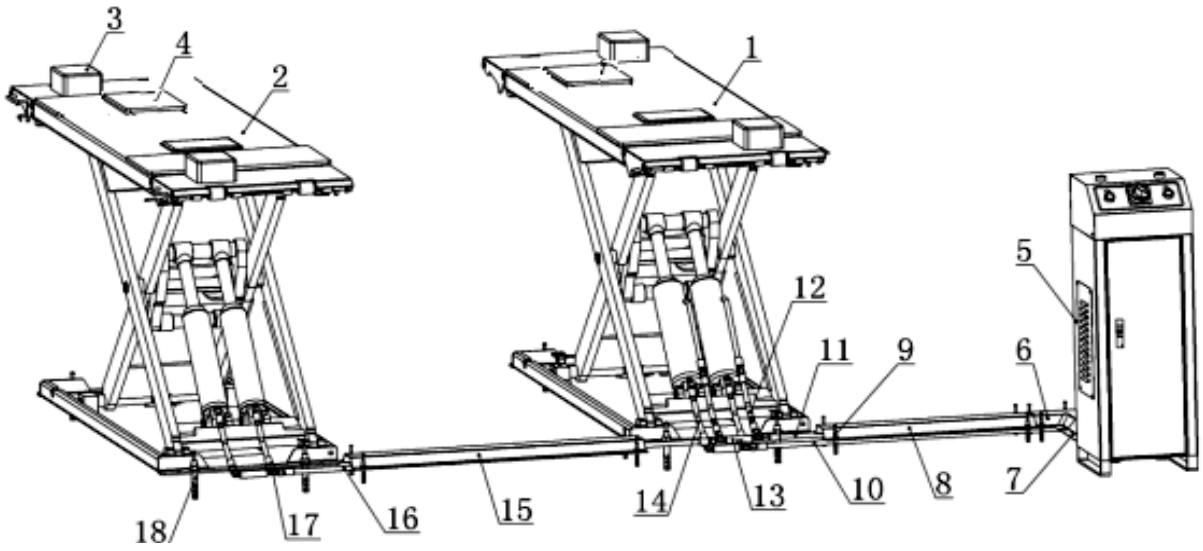

No	Material code	Specification	Name	Quanti ty	Remark
1	91040961401		Main platform	1	
2	91040961402		Sub platform	1	
3	16050400052	163*120*65	Thick rubber pad	4	
4	16050400053	168*125*25	Thin rubber pad	4	
5	16200402005	SXJS3210	Cabinet	1	
6	91040261107	SXJS3019-11-11	Oil pipe cover -right angle	1	
7	91040261102	SXJS3019-11-09-2	Oil pipe cover 800	1	
8	91040261101	SXJS3019-11-09-1	Oil pipe cover 650	1	
9	12030300006	M6x50	Expansion bolt	16	
10	14020201006	2800	Hydraulic oil pipe	1	
11	14020201006	2800	Hydraulic oil pipe	1	
12	14020204003	300	Hydraulic oil pipe	4	
13	15030100015	SXJS3019-00-80	Connector 60	1	
14	14020204028	320	Hydraulic oil pipe	2	
15	91040261103	SXJS3019-11-09-3	Oil pipe cover 900	1	
16	14020204004	1400	Hydraulic oil pipe	1	
17	15030300001	M14x1.5	T connector	4	
18	12030300002	M16*120	Expansion bolt	8	

Figure 2. The exploded view of parts

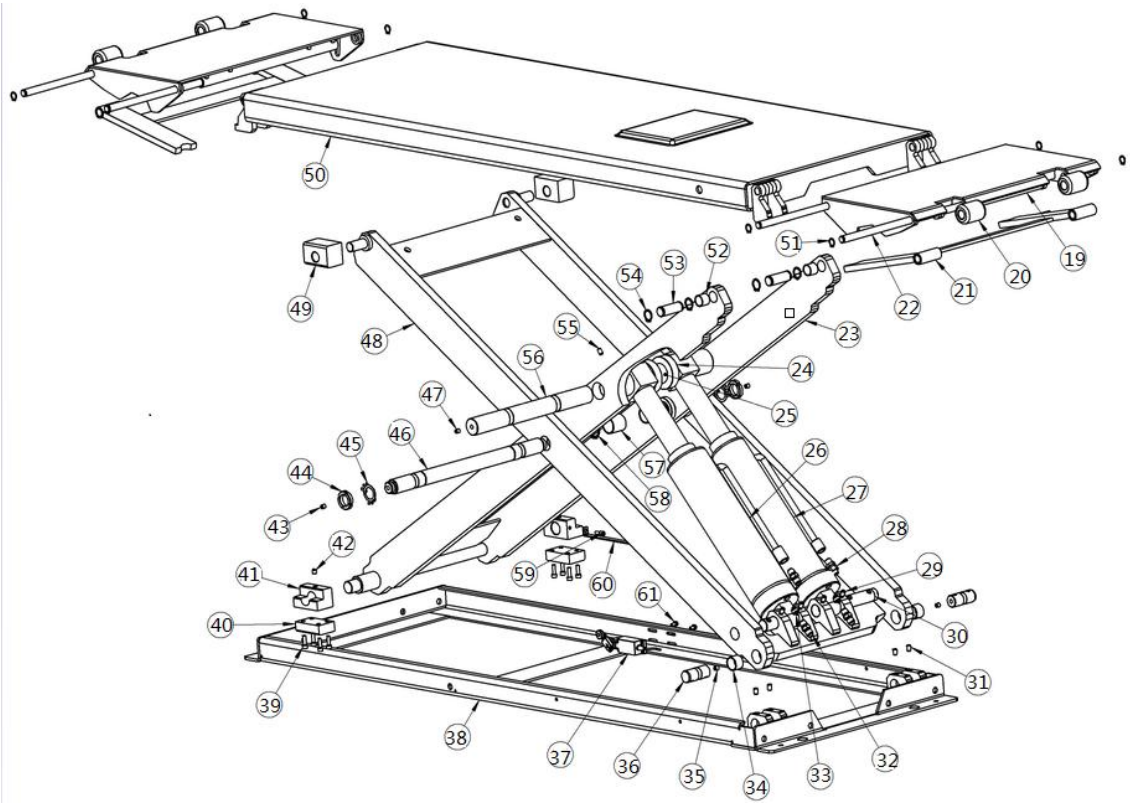

No	Material code	Specification	Name	Quantity	Remark
19	91040950700	SXJS3210X-05-00	Ramp	4	
20	91040961310	SXJS4023-18-05	Ramp nylon roller	8	
21	91040950500	SXJS3210X-06-00	Ramp support	4	
22	91040960104	SXJS3210X-00-04	Ramp roller axis	8	
23	91040920100	SXJS3210X-03-00	Inner scissor	2	
24	91040961305	SXJS3210X-00-09	Ramp head axis roller	4	
25	91040961304	SXJS3210X-00-08	Ramp head axis spacer	2	
26	14020407017	φ75xφ45x213	3210X main cylinder	2	
27	14020407018	φ60xφ45x213	3210X sub cylinder	2	
28	15030100002	M14*1.5	Right angle connector	4	
29	12020400013	M8*12	Inner hexagon bolt	8	
30	91040960106	SXJS3519-00-06-A	Cylinder base axis	4	
31	12020400013	M8*12	Inner hexagon flat lock bolt	8	
32	15030100002	M14*1.5	Straight connector	4	
33	21020300122		Anti explosion valve	4	

No	Material code	Specification	Name	Quantity	Remark
34	91040962002	SXJS3210X-00-22	Self lubrication bearing 282520	4	
35	14020100001	φ8	Straight-through pressure oil cup	4	
36	91040960105	SXJS3219-00-01-A	Platform base hinge	4	
37	11110300004	8104	Limit switch	1	
38	91040930100	SXJS3210X-02-00	Base	2	
39	12020301020	M6*20	Inner round bolt	16	
40	91040961302	SXJS3210X-00-06	Down slider inland nylon base	4	
41	91040961303	SXJS3210X-00-07	Down slider inland nylon base	4	
42	14020100001	φ8	Straight-through pressure oil cup	4	
43	14020100001	φ8	Straight-through pressure oil cup	4	
44	12010300001	M24*1.5	Round screw	4	
45	12010400004	24*1	Round screw stop spacer	4	
46	91040960102	SXJS3210X-00-02	Scissor middle axis	2	
47	14020100001	φ8	Straight-through pressure oil cup	4	
48	91040920200	SXJS3210X-04-00	Outer scissor	2	
49	91040961301	SXJS3210X-00-05	Upper slider	4	
50	91040910100	SXJS3210X-01-00	Lifting platform	2	
51	12090100002	φ14x1	Retaining ring for shaft	16	
52	91040962001	SXJS3210X-00-22	Inner scissor up axis Oil-free bearings	4	
53	91040960103	SXJS3210X-00-03	Platform hinge shaft	4	
54	12090100008	φ20x1	Circlips for axis	8	
55	12020400013	M8*12	Inner hexagon flat lock bolt	4	
56	91040960101	SXJS3210X-00-01	Cylinder head axis	2	
57	91040962003	SXJS3210X-00-22	Inner scissor middle axis oil-free bearing	4	
58	12090100004	φ30x1.2	Circle lip for axis	4	
59	12020301031	M6*15	Inner hexagon round head bolt	8	
60	91040961307	SXJS3210X-00-11	Limit switch board	1	
61	12050201002	5	Flat washer	4	

Figure 3: electrical schematic diagram(220V-1PH/415V-3PH)

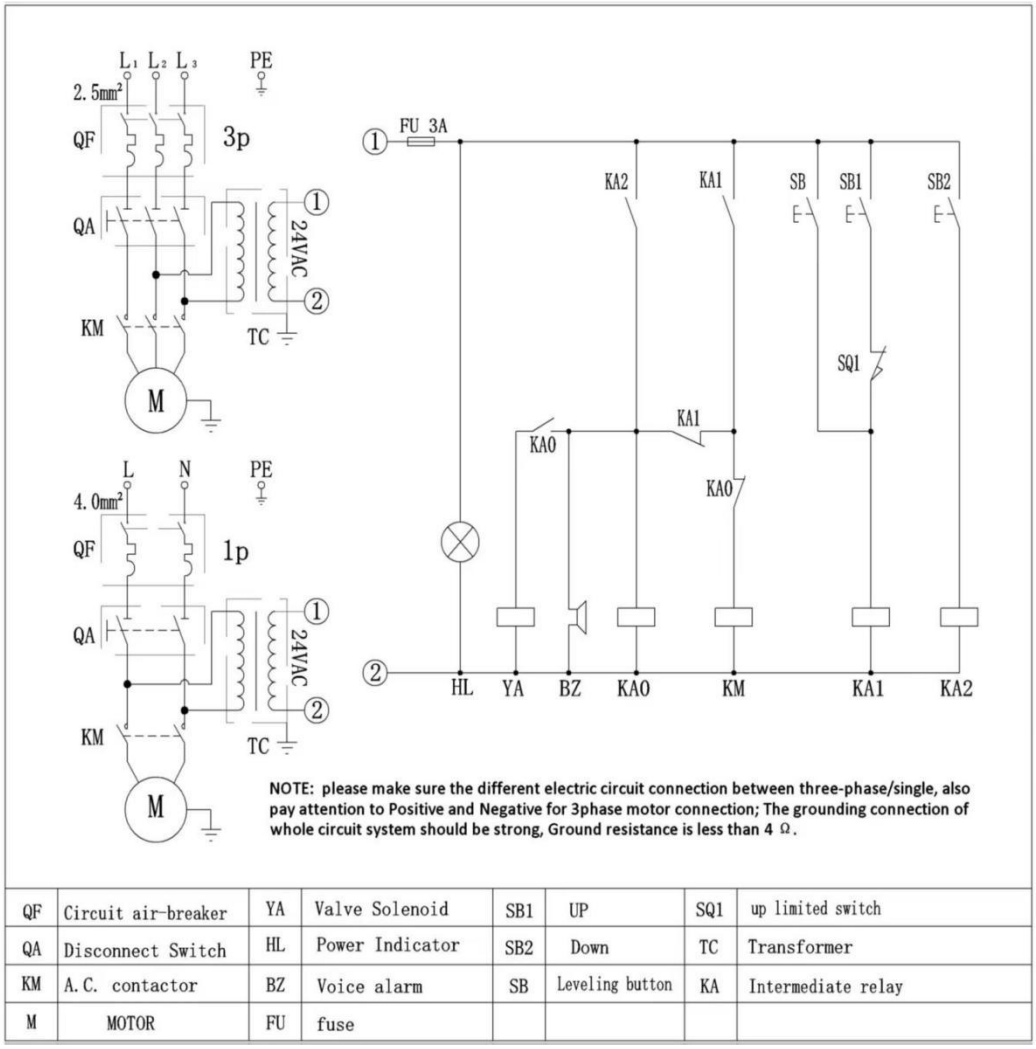

QF	Circuit air-breaker	YA	Valve Solenoid	SB1	UP	SQ1	up limited switch
QA	Disconnect Switch	HL	Power Indicator	SB2	Down	TC	Transformer
KM	A.C. contactor	BZ	Voice alarm	SB	Leveling button	KA	Intermediate relay
M	MOTOR	FU	fuse				